Current part is item (2) on diagram. Available at www.oshkoshequipment.com

(1) GROUP (a) FIG. NO.	(2) (b) ITEM NO.	(3) SMR CODE	(4) NATIONAL STOCK NUMBER	(5) PART NUMBER	(6) FSCM	DESCRIPTION USABLE ON CODE	(7) U/M	(8) QTY INC IN UNIT
						GROUP 20-HOIST,WINCH,CAPSTAN,WINDLASS, POWER CONTROL UNIT AND POWER TAKE-OFF		
						2001-HOIST,CAPSTAN,WINDLASS OR WINCH ASSEMBLY		
265	1	PAOZZ	5305-00-727-5677	MS90726-162	96906	SCREW,CAP,HEXAGON HEAD: TO ATTACH GUARD	EA	6
265	2	PAOZZ	5310-00-820-6653	MS35338-50	96906	WASHER,LOCK: TO ATTACH GUARD	EA	6
265	3	PAOZZ	2540-00-753-8715	7538715	19207	GUARD: DRUM SHAFT CABLE,FRONT WINCH	EA	2
265	4	PAOFF	2590-00-753-8687	7538687	19207	WINCH,DRUM,VEHICLE MOUNTING: FRONT ASSEMBLY	EA	1
266	4	PAOZZ	4730-00-278-3357	103881	92679	PLUG,PIPE: OIL FILLER,DRAIN AND LEVEL	EA	2
266	5	PAOZZ	5305-00-715-1194	MS51981-80	96906	SETSCREW: OIL FILLER AND DRAIN	EA	2
266	17		5315-00-736-8685	7368685	19207	PIN,STRAIGHT,HEADLESS: DRIVE SHAFT TO END YOKE	EA	1
266	18		5315-00-753-8333	MS24665-145	96906	PIN,COTTER: DRIVE SHAFT SHEAR PIN	EA	2
266	41	PAOZZ		133870	21450	BOLT: GEAR CASE ASSEMBLY	EA	4
267	1	PAOZZ	5310-00-880-7744	MS51967-5	96906	NUT,PLAIN,HEXAGON: LOCK POPPET LATCH	EA	3
267	2	PAOZZ	2540-00-740-9150	7409150	19207	LATCH DRUM POPPET: FRONT WINCH ASSEMBLY	EA	1
267	3	PAOZZ	5306-00-753-8725	7538725	19207	BOLT,INTERNALLY RELIEVED: DRUM LOCK PLUNGER	EA	1
267	4	PAOZZ	5360-00-753-8706	7538706	19207	SPRING,HELICAL,COMPRESSION: DRUM LOCKING PLUNGER	EA	1
267	6	PAOZZ	4730-00-018-9566	G1251	24617	PLUG,PIPE: END PLATE (1) DRUM ASSEMBLY (1)	EA	2
267	8	PAOZZ	4730-00-278-3357	103881	92679	PLUG,PIPE: OIL FILTER,DRAIN AND LEVEL	EA	2
267	46	PAOZZ	5305-00-873-6946	7538733	19207	SETSCREW: ADJUSTING CABLE DRUM BRAKE	EA	1
267	47	PAOZZ	2590-00-179-3442	8710655	19207	SPACER,WINCH: END PLATE ASSEMBLY	EA	6
267	48	PAOZZ	5310-00-933-8123	MS35339-30	96906	WASHER,LOCK: SHOULDER BOLT	EA	6
267	49	PAOZZ	5306-00-753-8709	7538709	19207	BOLT,SHOULDER: WINCH MOUNTING	EA	6
268	1	PAOZZ	4010-00-072-0713	7038820	19207	WIRE ROPE: WINCH	EA	1
268	2	MFOZZ		796767	19207	WIRE,ROPE,STEEL (200FT) (MFD FROM WIRE ROPE, 4010-00-274-6816)	EA	1
268	3	PAOZZ	4030-00-262-3152	7071882	19207	CLEVIS: WIRE ROPE TO CHAIN ASSEMBLY	EA	1
268	4	PAOZZ	2540-00-368-5015	10944689-3	19207	CHAIN ASSEMBLY,SINGLE (4 FT)	EA	1

Current part is item (2) on diagram. Available at www.oshkoshequipment.com

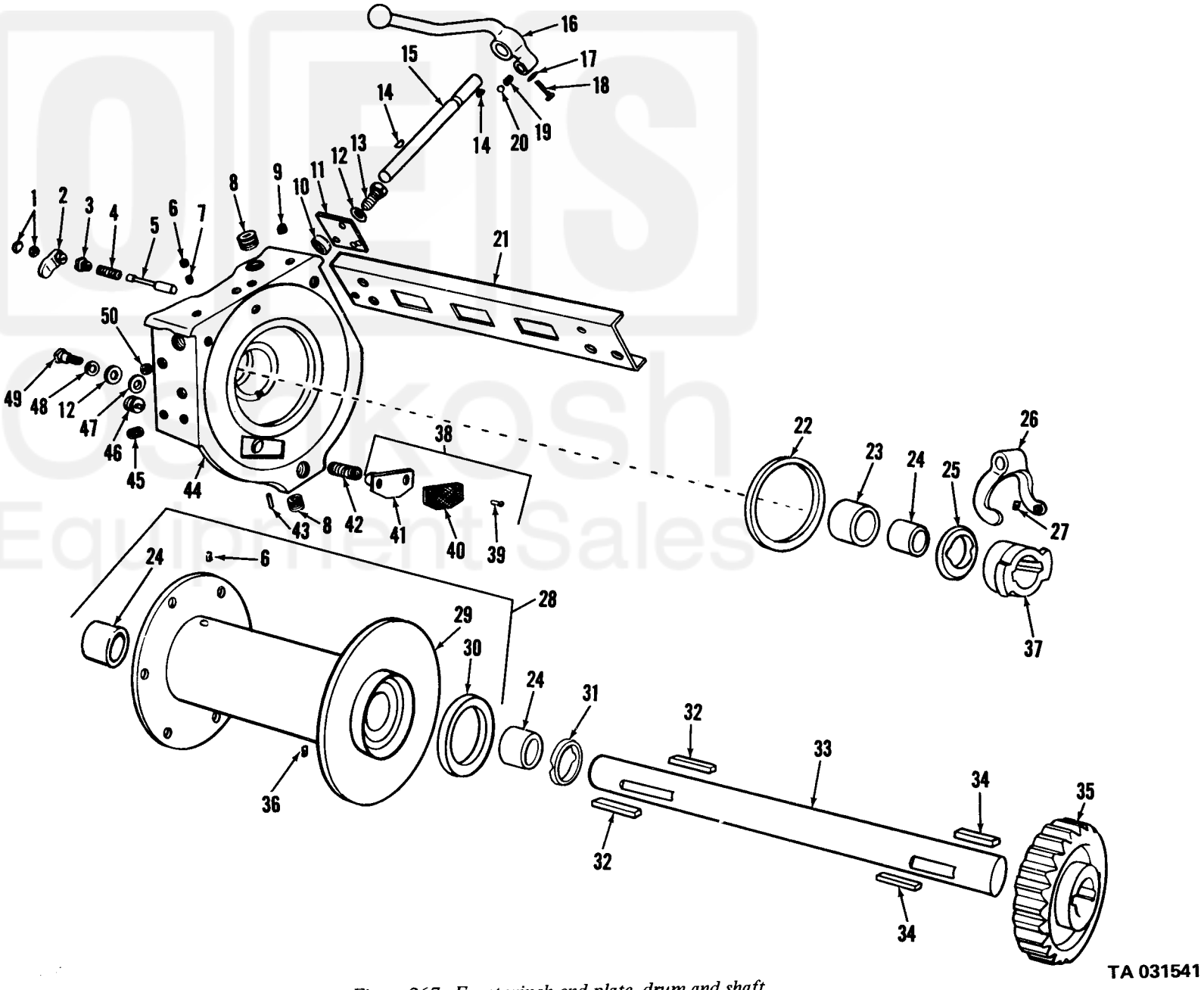

Figure 267. Front winch end plate, drum and shaft.

Current part is item (2) on diagram. Available at www.oshkoshequipment.com